www.rodavigo.net +34 986 288118
Servicio de Att. al Cliente

Double direction angular contact thrust ball bearings

4

More information

Polígono Industrial O Rebullón s/n. 36416 - Mos - España - rodavigo@rodavigo.com

www.rodavigo.net +34 986 288118
Servicio de Att. al Cliente

SKF double direction angular contact thrust ball bearings are designed to locate spindle shafts axially in both directions. These bearings are intended for mounting in combination with cylindrical roller bearings in the NN 30 K or N 10 K series in the same housing bore (→ **fig. 1**). This bearing combination simplifies machining of the housing bore.

Double direction angular contact thrust ball bearings are manufactured with the same nominal bore size and outside diameter as corresponding cylindrical roller bearings. However, the outside diameter tolerance of the housing washers, combined with the housing bore diameter and geometric tolerances recommended for super-precision cylindrical roller bearings under light to normal load and rotating inner ring load (→ *Recommended shaft and housing fits*, **page 302**) will result in an appropriate radial clearance in the housing bore. This clearance is sufficient to prevent radial loads from acting on the thrust bearing provided that its outer ring is not axially clamped in the housing.

Designs and variants

SKF supplies two designs of double direction angular contact thrust ball bearings:

- the basic design (BTW series, → **fig. 2**) for maximum load carrying capacity and maximum system rigidity for shaft diameters from 35 to 200 mm
- the high-speed design (BTM series, → **fig. 3**) for maximum speed capability for shaft diameters from 60 to 180 mm

Both designs are available either with steel balls or ceramic balls (hybrid bearings).

BTM and BTW series bearings share the same bore and outside diameters. But BTM

Fig. 1

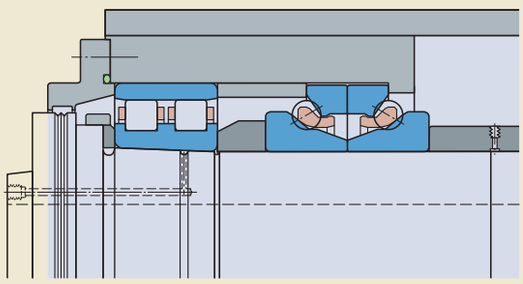

Fig. 2

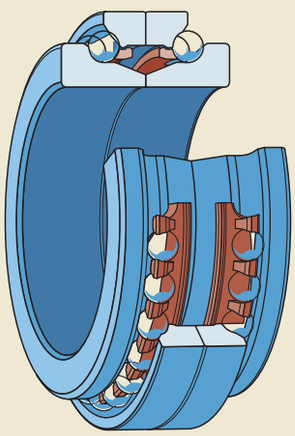

BTW

Polígono Industrial O Rebullón s/n. 36416 - Mos - España - rodavigo@rodavigo.com

www.rodavigo.net +34 986 288118
Servicio de Att. al Cliente

series bearings have a 25% lower bearing height (→ **fig. 4**), which makes them particularly suitable for compact arrangements. They do not have the same load carrying capacity and axial stiffness as bearings in the BTW series, but can operate at higher speeds.

Basic design bearings, BTW series

Bearings in the BTW series (→ **fig. 2**) consist of two single row angular contact thrust ball bearings with a 60° contact angle, arranged back-to-back. This configuration, combined with the large number of balls, enables these bearings to accommodate high axial loads in both directions and provides a high degree of system rigidity. Bearings in the BTW series are separable. When the shaft washers are pressed together, preload within a predetermined range will result.

On request, bearings in the BTW series can be provided with an annular groove and three lubrication holes in the housing washer (designation suffix W33, → **table 1**, **page 303**). They can also be supplied with a larger bore diameter so that they can be mounted immediately adjacent to the large diameter side of a cylindrical roller bearing with a tapered bore (e.g. BTW 60 CATN9/SP).

High-speed design bearings, BTM series

Bearings in the BTM series (→ **fig. 3**) consist of two non-separable single row angular contact ball bearings arranged back-to-back. They are designed to accommodate axial loads in both directions. When the inner rings are pressed together, preload within a predetermined range will result.

These high-speed design bearings are available with two different contact angles:

- a 30° contact angle, designation suffix A
- a 40° contact angle, designation suffix B

Bearings with a 30° contact angle can accommodate higher speeds while bearings with a 40° contact angle are more suitable for applications that require a higher degree of axial rigidity.

According to the ISO definition, BTM series bearings are radial bearings because they have a 30° or 40° contact angle. However, since these bearings are only intended to accommodate axial loads, only their basic load rating in the axial direction is listed in the product tables (→ **page 303**).

Fig. 3

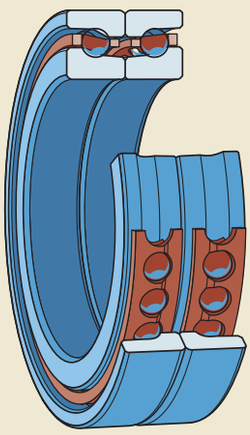

BTM

Fig. 4

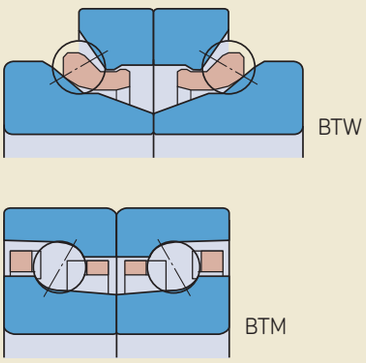

Polígono Industrial O Rebullón s/n. 36416 - Mos - España - rodavigo@rodavigo.com

www.rodavigo.net +34 986 288118
Servicio de Att. al Cliente

Table 1

Annular groove and lubrication hole dimensions for BTW .. W33 series bearings

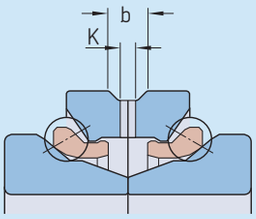

Bore diameter	Dimensions	
d	b	K
mm	mm	
35	5,5	3
40	5,5	3
45	5,5	3
50	5,5	3
55	5,5	3
60	5,5	3
65	5,5	3
70	5,5	3
75	5,5	3
80	8,4	4,5
85	8,4	4,5
90	8,4	4,5
95	8,4	4,5
100	8,4	4,5
110	8,4	4,5
120	8,4	4,5
130	11,2	6
140	11,2	6
150	14	7,5
160	14	7,5
170	14	7,5
180	16,8	9
190	16,8	9
200	16,8	9

Hybrid bearings

Hybrid angular contact thrust ball bearings (designation suffix HC) have rings made of bearing steel and rolling elements made of bearing grade silicon nitride (ceramic). As ceramic balls are lighter and have a higher modulus of elasticity and lower coefficient of thermal expansion than steel balls, hybrid bearings can provide the following advantages:

- higher degree of rigidity
- higher speed capability
- reduced centrifugal and inertial forces within the bearing
- minimized stress at the outer ring rolling contacts at high speeds
- reduced frictional heat
- less energy consumption
- extended bearing and grease service life
- less prone to skid smearing damage and cage damage when subjected to frequent rapid starts and stops
- less sensitive to temperature differences within the bearing
- more accurate preload control

For additional information about silicon nitride, refer to *Materials for bearing rings and rolling elements* (→ **page 304**).

Cages

Bearings in the BTW series are fitted as standard with the following cages:

- d ≤ 130 mm
  two glass fibre reinforced PA66 cages, snap-type, ball centred, designation suffix TN9
- d ≥ 140 mm
  two machined brass cages, snap-type, ball centred, designation suffix M

Polígono Industrial O Rebullón s/n. 36416 - Mos - España - rodavigo@rodavigo.com

www.rodavigo.net +34 986 288118
Servicio de Att. al Cliente

Bearings in the BTM series are fitted as standard with the following cages:

- d ≤ 130 mm
  two glass fibre reinforced PA66 cages, window-type, ball centred, designation suffix TN9
- d ≥ 140 mm
  two machined brass cages, window-type, ball centred, designation suffix M

The cages enable the preloaded bearings to run reliably at high speeds and to withstand rapid starts and stops as well as alternating loads. They also provide good grease retention.

For information about the suitability of cages, refer to *Cage materials* (→ **page 305**).

Markings on bearings

Each super-precision double direction angular contact thrust ball bearing has various markings on the side faces of the washers/rings (→ **fig. 5**):

1 SKF trademark
2 Complete designation of the bearing
3 Country of manufacture
4 Date of manufacture, coded
5 Identification/serial number of the shaft washer / inner ring
6 Identification number on the housing washer (for BTW series only)

Identification numbers on BTW series bearings

Identification numbers on the washers indicate bearing components that must be kept together as supplied. To distinguish the two halves of BTW series bearing washers, the identification numbers are followed by the letters "A" or "B" (e.g. 121A in **fig. 5**).

Additional markings on BTM series bearings

A "V-shaped" marking on the outside surface of the outer rings indicates how the bearings should be mounted to obtain the proper preload in the set (→ **fig. 6**).

The deviation of the mean bore diameter from nominal in microns is marked on the inner ring side face.

Fig. 5

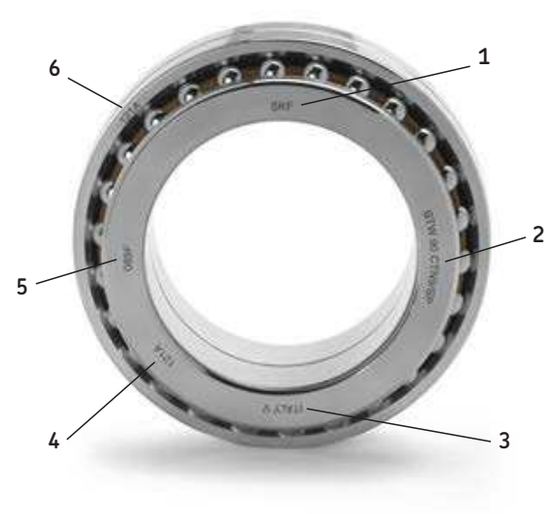

Fig. 6

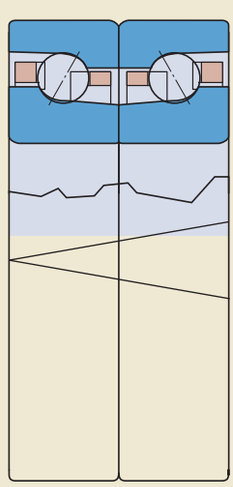

Polígono Industrial O Rebullón s/n. 36416 - Mos - España - rodavigo@rodavigo.com

www.rodavigo.net +34 986 288118
Servicio de Att. al Cliente

Bearing data

Boundary dimensions	• Bore and outside diameters in accordance with ISO 15, diameter series 0 for radial bearings • Remaining boundary dimensions not standardized, but common in the marketplace
Tolerances For additional information (→ **page 306**)	**BTW series bearings** • SP tolerance class (→ **table 2**) as standard • higher precision UP tolerance class (→ **table 3**) on request **BTM series bearings** • P4C tolerance class (→ **table 4**)

Table 2

SP class tolerances

Shaft washer and bearing height

d over	incl.	Δ_{dmp} high	low	Δ_{B1s} high	low	Δ_{T2s} high	low	S_i[1] max.
mm		µm		µm		µm		µm
30	**50**	1	–11	0	–100	0	–200	3
50	**80**	2	–14	0	–100	0	–200	4
80	**120**	3	–18	0	–200	0	–400	4
120	**180**	3	–21	0	–250	0	–500	5
180	**250**	4	–26	0	–250	0	–500	5

Housing washer

D over	incl.	Δ_{Dmp} high	low	Δ_{C1s} high	low	S_e max.
mm		µm		µm		
50	**80**	–24	–33	0	–50	Values are identical to those for shaft washer of the same bearing.
80	**120**	–28	–38	0	–50	
120	**150**	–33	–44	0	–100	
150	**180**	–33	–46	0	–100	
180	**250**	–37	–52	0	–125	
250	**315**	–41	–59	0	–125	

Tolerance symbols and definitions → **table 4**, **page 306**

[1] The quoted tolerances are approximate, as raceway run-out is measured in the direction of the ball load. When the bearing has been mounted, axial run-out is generally smaller than what is quoted in the table.

Polígono Industrial O Rebullón s/n. 36416 - Mos - España - rodavigo@rodavigo.com

www.rodavigo.net +34 986 288118
Servicio de Att. al Cliente

Table 3

UP class tolerances

Shaft washer and bearing height

d over	d incl.	Δ_{dmp} high	Δ_{dmp} low	Δ_{B1s} high	Δ_{B1s} low	Δ_{T2s} high	Δ_{T2s} low	S_i[1] max.
mm		µm		µm		µm		µm
30	**50**	0	–8	0	–100	0	–200	1,5
50	**80**	0	–9	0	–100	0	–200	2
80	**120**	0	–10	0	–200	0	–400	2
120	**180**	0	–13	0	–250	0	–500	3
180	**250**	0	–15	0	–250	0	–500	3

Housing washer

D over	D incl.	Δ_{Dmp} high	Δ_{Dmp} low	Δ_{C1s} high	Δ_{C1s} low	S_e max.
mm		µm		µm		
50	**80**	–24	–33	0	–50	Values are identical to those for shaft washer of the same bearing.
80	**120**	–28	–38	0	–50	
120	**150**	–33	–44	0	–100	
150	**180**	–33	–46	0	–100	
180	**250**	–37	–52	0	–125	
250	**315**	–41	–59	0	–125	

Tolerance symbols and definitions → **table 4, page 307**

[1] The quoted tolerances are approximate, as raceway run-out is measured in the direction of the ball load. When the bearing has been mounted, axial run-out is generally smaller than what is quoted in the table.

Table 4

P4C class tolerances

Inner ring

d over	d incl.	Δ_{ds} high	Δ_{ds} low	Δ_{B1s} high	Δ_{B1s} low	Δ_{T2s} high	Δ_{T2s} low	S_i[1] max.
mm		µm		µm		µm		µm
50	**80**	0	–7	0	–100	0	–200	3
80	**120**	0	–8	0	–200	0	–400	4
120	**180**	0	–10	0	–250	0	–500	4

Outer ring

D over	D incl.	Δ_{Ds} high	Δ_{Ds} low	Δ_{C1s} high	Δ_{C1s} low	S_e max.
mm		µm		µm		
80	**120**	–28	–38	0	–100	Values are identical to those for inner ring of the same bearing.
120	**150**	–33	–44	0	–200	
150	**180**	–33	–46	0	–250	
180	**250**	–37	–52	0	–250	

Tolerance symbols and definitions → **table 4, page 307**

[1] The quoted tolerances are approximate, as raceway run-out is measured in the direction of the ball load. When the bearing has been mounted, axial run-out is generally smaller than what is quoted in the table.

Polígono Industrial O Rebullón s/n. 36416 - Mos - España - rodavigo@rodavigo.com

www.rodavigo.net +34 986 288118
Servicio de Att. al Cliente

Preload

Double direction angular contact thrust ball bearings are manufactured so that they have a suitable operating preload when mounted.

Bearings in the BTM series are available with different preloads:

- light preload, designation suffix DBA
- heavy preload, designation suffix DBB

The preload is obtained during manufacturing by precisely adjusting the standout of the shaft washers / inner rings relative to their housing washers / outer rings. The preload values are listed in **table 5** and apply to new bearings prior to mounting. Bearing components and bearing sets must be kept together as supplied and mounted in the indicated order. For additional information, refer to *Markings on bearings* (→ **page 308**).

Effect of interference on preload

When double direction angular contact thrust ball bearings are mounted onto a shaft seat machined to the recommended h4Ⓔ diameter tolerance, a transition fit, which can be either a loose or an interference fit, will result. A loose fit will not affect preload. An interference fit increases preload. For additional information, contact the SKF application engineering service.

Table 5

Axial preload for unmounted bearings

Bore diameter d	Axial preload BTW	BTM .. A DBA	BTM .. A DBB	BTM .. B DBA	BTM .. B DBB
mm	N	N		N	
35	340	–	–	–	–
40	360	–	–	–	–
45	390	–	–	–	–
50	415	–	–	–	–
55	440	–	–	–	–
60	470	200	600	250	750
65	490	200	600	250	750
70	515	250	750	350	1 050
75	545	250	750	350	1 050
80	575	300	900	400	1 200
85	600	300	900	400	1 200
90	625	400	1 200	550	1 650
95	655	400	1 200	550	1 650
100	690	400	1 200	550	1 650
110	735	600	1 800	750	2 250
120	800	600	1 800	850	2 550
130	870	800	2 400	1 050	3 150
140	940	800	2 400	1 050	3 150
150	1 015	1 000	3 000	1 300	3 900
160	1 100	1 100	3 300	1 500	4 500
170	1 185	1 350	4 050	1 800	5 400
180	1 290	1 600	4 800	2 100	6 300
190	1 385	–	–	–	–
200	1 525	–	–	–	–

Polígono Industrial O Rebullón s/n. 36416 - Mos - España - rodavigo@rodavigo.com

www.rodavigo.net +34 986 288118
Servicio de Att. al Cliente

Axial stiffness

Axial stiffness depends on the elastic deformation (deflection) of the bearing under load and can be expressed as a ratio of load to deflection. However, since the relationship between deflection and load is not linear, only guideline values can be provided (→ **table 6**). These values apply to mounted bearings under static conditions and subjected to moderate loads. More accurate values for axial stiffness can be calculated using advanced computer methods. For additional information, contact the SKF application engineering service and refer to *Bearing stiffness* (→ **page 309**).

Table 6

Static axial stiffness

Bore diameter	**Static axial stiffness BTW**		**BTM .. A/DBA**		**BTM .. A/DBB**		**BTM .. B/DBA**		**BTM .. B/DBB**	
d	with steel balls	with ceramic balls	with steel balls	with ceramic balls	with steel balls	with ceramic balls	with steel balls	with ceramic balls	with steel balls	with ceramic balls
mm	N/µm		N/µm		N/µm		N/µm		N/µm	
35	455	500	–	–	–	–	–	–	–	–
40	481	529	–	–	–	–	–	–	–	–
45	513	564	–	–	–	–	–	–	–	–
50	559	614	–	–	–	–	–	–	–	–
55	580	639	–	–	–	–	–	–	–	–
60	618	680	196	218	296	328	321	356	484	537
65	653	719	206	229	313	347	342	380	510	566
70	673	741	227	252	342	380	389	432	587	651
75	714	786	234	259	354	393	402	447	603	670
80	735	809	252	280	380	422	426	472	635	705
85	763	840	259	287	390	432	435	483	656	728
90	792	871	292	324	441	490	495	550	747	829
95	822	904	299	331	453	503	509	565	767	852
100	880	968	315	350	476	529	534	593	809	898
110	893	982	357	396	541	600	591	656	886	983
120	979	1 077	377	419	571	634	649	720	985	1 093
130	1 032	1 135	428	475	649	720	719	798	1 082	1 202
140	1 089	1 198	440	488	667	740	739	821	1 113	1 236
150	1 125	1 238	483	536	733	814	807	896	1 219	1 353
160	1 220	1 341	516	573	784	870	882	979	1 331	1 478
170	1 225	1 348	551	612	833	925	928	1 030	1 399	1 553
180	1 314	1 445	597	663	902	1 002	1 000	1 110	1 504	1 669
190	1 361	1 497	–	–	–	–	–	–	–	–
200	1 395	1 535	–	–	–	–	–	–	–	–

Polígono Industrial O Rebullón s/n. 36416 - Mos - España - rodavigo@rodavigo.com

www.rodavigo.net +34 986 288118
Servicio de Att. al Cliente

Equivalent bearing loads

Equivalent dynamic bearing load

For bearings that accommodate axial loads only:

$P = F_a$

Equivalent static bearing load

For bearings that accommodate axial loads only:

$P_0 = F_a$

Attainable speeds

The attainable speeds listed in the product tables (→ **page 310**) are guideline values and are valid under certain conditions. For additional information, refer to *Attainable speeds* on **page 310**.

For bearings in the BTM series with a heavy preload (designation suffix DBB), the attainable speeds are 75% of the values for the same bearing with a light preload (designation suffix DBA).

Mounting

Bearing components and bearing sets must be kept together as supplied and mounted in the indicated order. For additional information, refer to *Markings on bearings* (→ **page 310**).

Polígono Industrial O Rebullón s/n. 36416 - Mos - España - rodavigo@rodavigo.com

www.rodavigo.net +34 986 288118
Servicio de Att. al Cliente

Designation system

Examples:	BTW 70 CTN9/SPW33	BTW	70	C	TN9	/		SP	W33		
	BTM 150 AM/HCP4CDBA	BTM	150	A	M	/	HC	P4C		DB	A

Bearing series

BTW Basic design double direction angular contact thrust ball bearing
BTM High-speed design double direction angular contact thrust ball bearing

Bearing size

35 to **200** Bore diameter [mm]

Internal design

A 30° contact angle
B 40° contact angle
C 60° contact angle
A As a second letter after the contact angle information (for BTW series only): Bearing with a larger bore to to be mounted on the large diameter side of a cylindrical roller bearing with a tapered bore.

Cage

M Two machined brass cages, snap-type (for BTW series), window-type (for BTM series), ball centred
TN9 Two glass fibre reinforced PA66 cages, snap-type (for BTW series), window-type (for BTM series), ball centred

Ball material

– Carbon chromium steel (no designation suffix)
HC Balls made of bearing grade silicon nitride Si_3N_4 (hybrid bearing)

Accuracy

P4C Dimensional accuracy approximately to ISO tolerance class 4 and running accuracy better than ISO tolerance class 4 for radial bearings (for BTM series bearings only).

SP Dimensional accuracy approximately to ISO tolerance class 5 and running accuracy better than ISO tolerance class 4 for thrust bearings (for BTW series bearings only).

UP Dimensional accuracy approximately to ISO tolerance class 4 and running accuracy better than ISO tolerance class 4 for thrust bearings (for BTW series bearings only).

Lubrication feature (for BTW series bearings only)

W33 Annular groove and three lubrication holes in the housing washer

Arrangement (for BTM series bearings only)

DB Two bearings arranged back-to-back

Preload (for BTM series bearings only)

A Light preload
B Heavy preload
G... Special preload, expressed in daN e.g. G240

Polígono Industrial O Rebullón s/n. 36416 - Mos - España - rodavigo@rodavigo.com

4.1 Double direction angular contact thrust ball bearings

d **35 – 80** mm

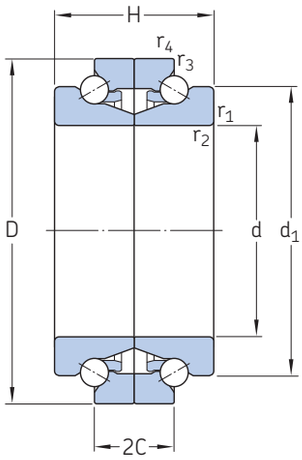

BTW

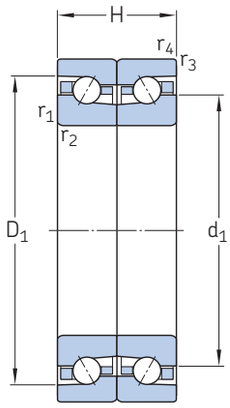

BTM

Principal dimensions			Basic load ratings		Fatigue load limit	Attainable speeds[1]		Mass	Designation
			dynamic	static		Grease lubrication	Oil-air lubrication		
d	D	H	C	C_0	P_u				
mm			kN		kN	r/min		kg	–
35	62	34	16,8	39	1,83	11 000	14 000	0,35	**BTW 35 CTN9/SP**
40	68	36	19,5	46,5	2,24	10 000	13 000	0,42	**BTW 40 CTN9/SP**
45	75	38	22,1	54	2,6	9 500	12 000	0,53	**BTW 45 CTN9/SP**
50	80	38	22,5	60	2,85	9 000	11 000	0,58	**BTW 50 CTN9/SP**
55	90	44	30,2	80	3,8	7 500	9 000	0,87	**BTW 55 CTN9/SP**
60	95	33	21,6	43	1,86	10 100	12 900	0,85	**BTM 60 ATN9/P4CDB**
	95	33	21,6	43	1,86	12 700	15 200	0,8	**BTM 60 ATN9/HCP4CDB**
	95	33	25	50	2,12	9 000	11 500	0,85	**BTM 60 BTN9/P4CDB**
	95	33	25	50	2,12	11 100	13 300	0,8	**BTM 60 BTN9/HCP4CDB**
	95	44	30,7	83	4	7 500	9 000	0,93	**BTW 60 CTN9/SP**
65	100	33	22	47,5	2	9 500	12 100	0,9	**BTM 65 ATN9/P4CDB**
	100	33	22	47,5	2	11 900	14 200	0,85	**BTM 65 ATN9/HCP4CDB**
	100	33	26	54	2,32	8 400	10 900	0,9	**BTM 65 BTN9/P4CDB**
	100	33	26	54	2,32	10 400	12 400	0,85	**BTM 65 BTN9/HCP4CDB**
	100	44	31,9	90	4,3	7 000	8 500	1	**BTW 65 CTN9/SP**
70	110	36	27,5	58,5	2,45	8 700	11 100	1,2	**BTM 70 ATN9/P4CDB**
	110	36	27,5	58,5	2,45	10 900	13 000	1,15	**BTM 70 ATN9/HCP4CDB**
	110	36	32	67	2,85	7 700	9 900	1,2	**BTM 70 BTN9/P4CDB**
	110	36	32	67	2,85	9 500	11 300	1,15	**BTM 70 BTN9/HCP4CDB**
	110	48	39	112	5,3	6 700	8 000	1,35	**BTW 70 CTN9/SP**
75	115	36	27,5	61	2,6	8 200	10 400	1,3	**BTM 75 ATN9/P4CDB**
	115	36	27,5	61	2,6	10 300	12 300	1,2	**BTM 75 ATN9/HCP4CDB**
	115	36	32,5	69,5	2,9	7 300	9 400	1,3	**BTM 75 BTN9/P4CDB**
	115	36	32,5	69,5	2,9	9 000	10 700	1,2	**BTM 75 BTN9/HCP4CDB**
	115	48	39,7	116	5,6	6 300	7 500	1,45	**BTW 75 CTN9/SP**
80	125	40,5	33,5	73,5	3,1	7 600	9 700	1,75	**BTM 80 ATN9/P4CDB**
	125	40,5	33,5	73,5	3,1	9 600	11 500	1,65	**BTM 80 ATN9/HCP4CDB**
	125	40,5	39	85	3,55	6 800	8 700	1,75	**BTM 80 BTN9/P4CDB**
	125	40,5	39	85	3,55	8 400	10 000	1,65	**BTM 80 BTN9/HCP4CDB**
	125	54	47,5	140	6,55	5 600	6 700	1,95	**BTW 80 CTN9/SP**

[1] Speed values for BTM series bearings are applicable to those with a light preload (suffix DBA). For bearings with a heavy preload (suffix DBB), attainable speeds are about 75% of the quoted values.

Polígono Industrial O Rebullón s/n. 36416 - Mos - España - rodavigo@rodavigo.com

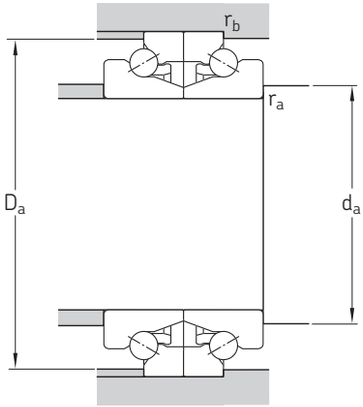

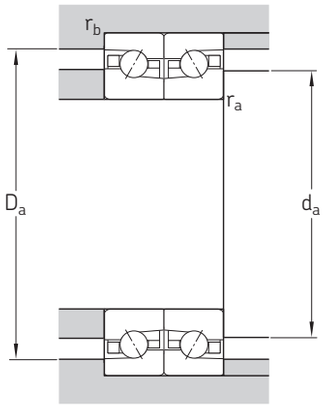

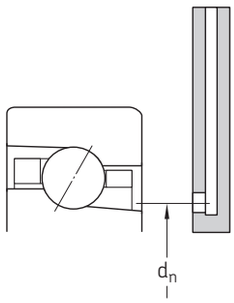

Dimensions						Abutment and fillet dimensions						Reference grease quantity[1]
d	d_1	2C	D_1	$r_{1,2}$ min.	$r_{3,4}$ min.	d_a min.	D_a min.	D_a max.	r_a max.	r_b max.	d_n	G_{ref}
mm						mm						cm^3
35	50,8	17	50,2	1	0,3	45	57,3	58	1	0,3	–	1,9
40	56,4	18	55,9	1	0,3	50	63,4	64	1	0,3	–	2,5
45	62,5	19	61,9	1	0,3	56	69,9	71	1	0,3	–	3,1
50	67,5	19	66,9	1	0,3	61	74,9	76	1	0,3	–	3,3
55	75,2	22	74,4	1,1	0,6	68	84	85	1	0,6	–	4,8
60	75,9	–	81,5	1,1	0,6	66	–	91,8	1	0,6	74	7,8
	75,9	–	81,5	1,1	0,6	66	–	91,8	1	0,6	74	7,8
	75,9	–	81,5	1,1	0,6	66	–	91,8	1	0,6	74	7,8
	75,9	–	81,5	1,1	0,6	66	–	91,8	1	0,6	74	7,8
	80,2	22	79,4	1,1	0,6	73	89	90	1	0,6	–	5,2
65	80,9	–	86,5	1,1	0,6	71	–	96,8	1	0,6	79	8,4
	80,9	–	86,5	1,1	0,6	71	–	96,8	1	0,6	79	8,4
	80,9	–	86,5	1,1	0,6	71	–	96,8	1	0,6	79	8,4
	80,9	–	86,5	1,1	0,6	71	–	96,8	1	0,6	79	8,4
	85,2	22	84,4	1,1	0,6	78	94	95	1	0,6	–	5,6
70	88,55	–	94,9	1,1	0,6	76	–	106	1	0,6	86	11
	88,55	–	94,9	1,1	0,6	76	–	106	1	0,6	86	11
	88,55	–	94,9	1,1	0,6	76	–	106	1	0,6	86	11
	88,55	–	94,9	1,1	0,6	76	–	106	1	0,6	86	11
	93,5	24	92,5	1,1	0,6	85	103,4	105	1	0,6	–	7,4
75	93,55	–	99,9	1,1	0,6	81	–	111	1	0,6	91	11,8
	93,55	–	99,9	1,1	0,6	81	–	111	1	0,6	91	11,8
	93,55	–	99,9	1,1	0,6	81	–	111	1	0,6	91	11,8
	93,55	–	99,9	1,1	0,6	81	–	111	1	0,6	91	11,8
	98,5	24	97,5	1,1	0,6	90	108,4	110	1	0,6	–	7,8
80	100,8	–	107,8	1,1	0,6	86	–	121	1	0,6	98	16
	100,8	–	107,8	1,1	0,6	86	–	121	1	0,6	98	16
	100,8	–	107,8	1,1	0,6	86	–	121	1	0,6	98	16
	100,8	–	107,8	1,1	0,6	86	–	121	1	0,6	98	16
	106,2	27	105	1,1	0,6	97	117,3	119	1	0,6	–	11

[1] For calculating the initial grease fill → **page 313**.

4.1 Double direction angular contact thrust ball bearings
d **85 – 120** mm

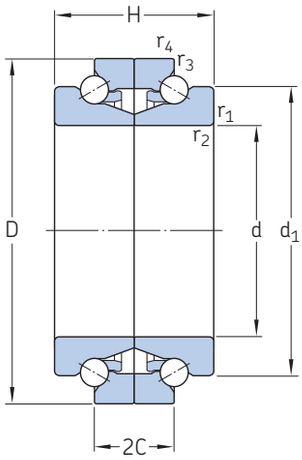

BTW

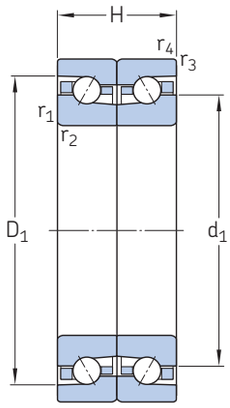

BTM

Principal dimensions			Basic load ratings		Fatigue load limit	Attainable speeds[1]		Mass	Designation
			dynamic	static		Grease lubrication	Oil-air lubrication		
d	D	H	C	C_0	P_u				
mm			kN		kN	r/min		kg	–
85	130	40,5	33,5	78	3,15	7 300	9 300	1,85	**BTM 85 ATN9/P4CDB**
	130	40,5	33,5	78	3,15	9 100	10 900	1,7	**BTM 85 ATN9/HCP4CDB**
	130	40,5	40	88	3,6	6 400	8 300	1,85	**BTM 85 BTN9/P4CDB**
	130	40,5	40	88	3,6	8 000	9 500	1,7	**BTM 85 BTN9/HCP4CDB**
	130	54	48,8	146	6,7	5 600	6 700	2,05	**BTW 85 CTN9/SP**
90	140	45	39	91,5	3,55	6 800	8 700	2,45	**BTM 90 ATN9/P4CDB**
	140	45	39	91,5	3,55	8 500	10 100	2,3	**BTM 90 ATN9/HCP4CDB**
	140	45	46,5	102	4	6 000	7 700	2,45	**BTM 90 BTN9/P4CDB**
	140	45	46,5	102	4	7 400	8 800	2,3	**BTM 90 BTN9/HCP4CDB**
	140	60	55,9	173	7,65	5 000	6 000	2,7	**BTW 90 CTN9/SP**
95	145	45	40	93	3,6	6 500	8 300	2,55	**BTM 95 ATN9/P4CDB**
	145	45	40	93	3,6	8 200	9 800	2,4	**BTM 95 ATN9/HCP4CDB**
	145	45	46,5	106	4,05	5 800	7 400	2,55	**BTM 95 BTN9/P4CDB**
	145	45	46,5	106	4,05	7 200	8 600	2,4	**BTM 95 BTN9/HCP4CDB**
	145	60	57,2	180	7,8	5 000	6 000	2,8	**BTW 95 CTN9/SP**
100	150	45	41,5	102	3,8	6 300	7 900	2,65	**BTM 100 ATN9/P4CDB**
	150	45	41,5	102	3,8	7 900	9 400	2,5	**BTM 100 ATN9/HCP4CDB**
	150	45	48	116	4,3	5 600	7 100	2,65	**BTM 100 BTN9/P4CDB**
	150	45	48	116	4,3	6 900	8 200	2,5	**BTM 100 BTN9/HCP4CDB**
	150	60	59,2	193	8,15	5 000	6 000	2,95	**BTW 100 CTN9/SP**
110	170	54	57	137	4,8	5 600	7 100	4,25	**BTM 110 ATN9/P4CDB**
	170	54	57	137	4,8	7 000	8 300	3,95	**BTM 110 ATN9/HCP4CDB**
	170	54	65,5	153	5,5	4 900	6 400	4,25	**BTM 110 BTN9/P4CDB**
	170	54	65,5	153	5,5	6 100	7 300	3,95	**BTM 110 BTN9/HCP4CDB**
	170	72	81,9	260	10,4	4 300	5 000	4,7	**BTW 110 CTN9/SP**
120	180	54	58,5	146	5	5 200	6 700	4,55	**BTM 120 ATN9/P4CDB**
	180	54	58,5	146	5	6 500	7 700	4,2	**BTM 120 ATN9/HCP4CDB**
	180	54	69,5	166	5,7	4 600	5 900	4,55	**BTM 120 BTN9/P4CDB**
	180	54	69,5	166	5,7	5 700	6 800	4,2	**BTM 120 BTN9/HCP4CDB**
	180	72	85,2	280	10,8	4 000	4 800	5,05	**BTW 120 CTN9/SP**

[1] Speed values for BTM series bearings are applicable to those with a light preload (suffix DBA). For bearings with a heavy preload (suffix DBB), attainable speeds are about 75% of the quoted values.

Polígono Industrial O Rebullón s/n. 36416 - Mos - España - rodavigo@rodavigo.com

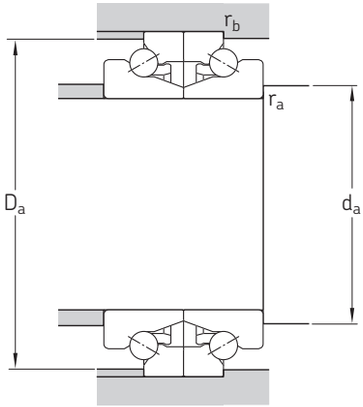

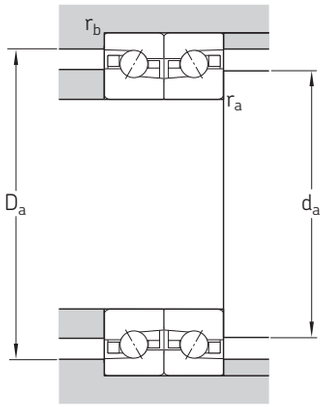

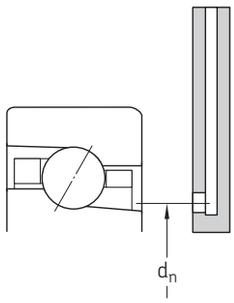

Dimensions						Abutment and fillet dimensions						Reference grease quantity[1]
d	d_1	2C	D_1	$r_{1,2}$ min.	$r_{3,4}$ min.	d_a min.	D_a min.	D_a max.	r_a max.	r_b max.	d_n	G_{ref}
mm						mm						cm^3
85	105,8	–	112,8	1,1	0,6	91	–	126	1	0,6	103	16,8
	105,8	–	112,8	1,1	0,6	91	–	126	1	0,6	103	16,8
	105,8	–	112,8	1,1	0,6	91	–	126	1	0,6	103	16,8
	105,8	–	112,8	1,1	0,6	91	–	126	1	0,6	103	16,8
	112	27	110	1,1	0,6	102	122,3	124	1	0,6	–	11
90	113	–	120,6	1,5	1	97	–	135	1,5	1	110	22
	113	–	120,6	1,5	1	97	–	135	1,5	1	110	22
	113	–	120,6	1,5	1	97	–	135	1,5	1	110	22
	113	–	120,6	1,5	1	97	–	135	1,5	1	110	22
	119	30	117,5	1,5	0,6	109	130,9	132	1,5	0,6	–	14
95	118	–	125,6	1,5	1	102	–	140	1,5	1	115	22
	118	–	125,6	1,5	1	102	–	140	1,5	1	115	22
	118	–	125,6	1,5	1	102	–	140	1,5	1	115	22
	118	–	125,6	1,5	1	102	–	140	1,5	1	115	22
	124	30	122,5	1,5	0,6	114	135,9	137	1,5	0,6	–	15
100	123	–	130,6	1,5	1	107	–	145	1,5	1	120	22
	123	–	130,6	1,5	1	107	–	145	1,5	1	120	22
	123	–	130,6	1,5	1	107	–	145	1,5	1	120	22
	123	–	130,6	1,5	1	107	–	145	1,5	1	120	22
	129	30	127,5	1,5	0,6	119	140,9	142	1,5	0,6	–	16
110	137,9	–	147,1	2	1	119	–	165	2	1	134	38
	137,9	–	147,1	2	1	119	–	165	2	1	134	38
	137,9	–	147,1	2	1	119	–	165	2	1	134	38
	137,9	–	147,1	2	1	119	–	165	2	1	134	38
	145	36	143,1	2	1	132	159,8	161	2	1	–	27
120	147,7	–	157,1	2	1	129	–	175	2	1	144	40
	147,7	–	157,1	2	1	129	–	175	2	1	144	40
	147,7	–	157,1	2	1	129	–	175	2	1	144	40
	147,7	–	157,1	2	1	129	–	175	2	1	144	40
	155	36	153,1	2	1	142	169,8	171	2	1	–	28

[1] For calculating the initial grease fill → **page 315**.

4.1 Double direction angular contact thrust ball bearings
d **130 – 200** mm

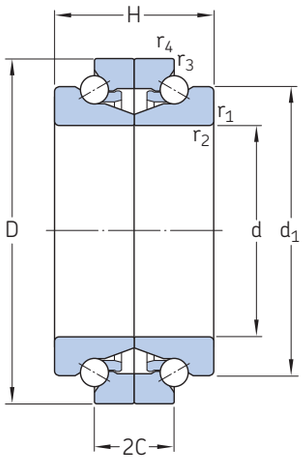

BTW

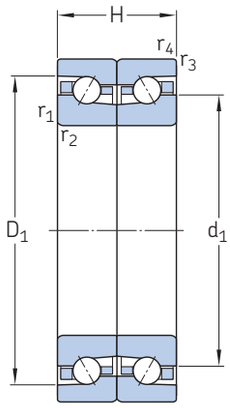

BTM

Principal dimensions			Basic load ratings		Fatigue load limit	Attainable speeds[1]		Mass	Designation
			dynamic	static		Grease lubrication	Oil-air lubrication		
d	D	H	C	C_0	P_u				
mm			kN		kN	r/min		kg	–
130	200	63	73,5	186	6,1	4 700	6 000	6,9	**BTM 130 ATN9/P4CDB**
	200	63	73,5	186	6,1	5 900	7 000	6,45	**BTM 130 ATN9/HCP4CDB**
	200	63	85	208	6,8	4 200	5 400	6,9	**BTM 130 BTN9/P4CDB**
	200	63	85	208	6,8	5 100	6 100	6,45	**BTM 130 BTN9/HCP4CDB**
	200	84	106	360	13,2	3 600	4 300	7,6	**BTW 130 CTN9/SP**
140	210	63	73,5	190	6,1	4 400	5 700	7,85	**BTM 140 AM/P4CDB**
	210	63	73,5	190	6,1	5 600	6 700	7,4	**BTM 140 AM/HCP4CDB**
	210	63	86,5	216	6,95	3 900	5 100	7,85	**BTM 140 BM/P4CDB**
	210	63	86,5	216	6,95	4 900	5 800	7,4	**BTM 140 BM/HCP4CDB**
	210	84	106	375	13,2	3 200	3 800	8,6	**BTW 140 CM/SP**
150	225	67,5	86,5	228	7,1	4 100	5 300	9,6	**BTM 150 AM/P4CDB**
	225	67,5	86,5	228	7,1	5 200	6 200	9	**BTM 150 AM/HCP4CDB**
	225	67,5	104	260	8	3 700	4 800	9,6	**BTM 150 BM/P4CDB**
	225	67,5	104	260	8	4 500	5 300	9	**BTM 150 BM/HCP4CDB**
	225	90	127	440	15,3	3 000	3 600	10,5	**BTW 150 CM/SP**
160	240	72	98	260	7,8	3 900	5 000	12	**BTM 160 AM/P4CDB**
	240	72	98	260	7,8	4 900	5 800	11	**BTM 160 AM/HCP4CDB**
	240	72	114	290	8,8	3 400	4 500	12	**BTM 160 BM/P4CDB**
	240	72	114	290	8,8	4 300	5 100	11	**BTM 160 BM/HCP4CDB**
	240	96	140	510	16,6	2 800	3 400	13	**BTW 160 CM/SP**
170	260	81	118	315	9,15	3 600	4 700	16	**BTM 170 AM/P4CDB**
	260	81	118	315	9,15	4 500	5 300	15	**BTM 170 AM/HCP4CDB**
	260	81	140	360	10,4	3 200	4 100	16	**BTM 170 BM/P4CDB**
	260	81	140	360	10,4	3 900	4 600	15	**BTM 170 BM/HCP4CDB**
	260	108	174	610	19,6	2 400	3 000	17,5	**BTW 170 CM/SP**
180	280	90	140	365	10,4	3 400	4 400	21,5	**BTM 180 AM/P4CDB**
	280	90	140	365	10,4	4 200	5 000	20	**BTM 180 AM/HCP4CDB**
	280	90	163	425	11,8	3 000	3 800	21,5	**BTM 180 BM/P4CDB**
	280	90	163	425	11,8	3 600	4 300	20	**BTM 180 BM/HCP4CDB**
	280	120	199	710	22,4	2 000	2 600	23	**BTW 180 CM/SP**
190	290	120	203	735	22,8	2 000	2 600	24	**BTW 190 CM/SP**
200	310	132	238	865	25,5	1 900	2 400	31	**BTW 200 CM/SP**

[1] Speed values for BTM series bearings are applicable to those with a light preload (suffix DBA). For bearings with a heavy preload (suffix DBB), attainable speeds are about 75% of the quoted values.

Polígono Industrial O Rebullón s/n. 36416 - Mos - España - rodavigo@rodavigo.com

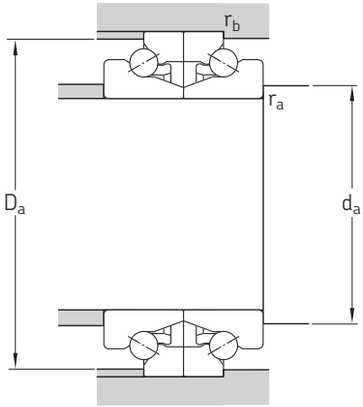

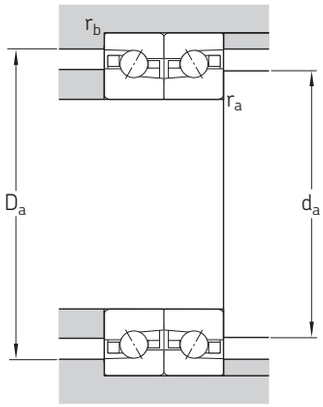

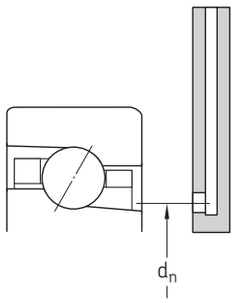

Dimensions						Abutment and fillet dimensions						Reference grease quantity[1]
d	d_1	2C	D_1	$r_{1,2}$ min.	$r_{3,4}$ min.	d_a min.	D_a min.	D_a max.	r_a max.	r_b max.	d_n	G_{ref}
mm						mm						cm^3
130	162,6	–	173,3	2	1	139	–	195	2	1	158	58
	162,6	–	173,3	2	1	139	–	195	2	1	158	58
	162,6	–	173,3	2	1	139	–	195	2	1	158	58
	162,6	–	173,3	2	1	139	–	195	2	1	158	58
	171	42	168,6	2	1	156	187,5	190	2	1	–	40
140	172,6	–	183,3	2,1	1	151	–	205	2	1	168	62
	172,6	–	183,3	2,1	1	151	–	205	2	1	168	62
	172,6	–	183,3	2,1	1	151	–	205	2	1	168	62
	172,6	–	183,3	2,1	1	151	–	205	2	1	168	62
	181	42	178,6	2,1	1	166	197,7	200	2	1	–	45
150	184,9	–	196,4	2,1	1,1	161	–	219	2	1	180	80
	184,9	–	196,4	2,1	1,1	161	–	219	2	1	180	80
	184,9	–	196,4	2,1	1,1	161	–	219	2	1	180	80
	184,9	–	196,4	2,1	1,1	161	–	219	2	1	180	80
	194	45	191,2	2,1	1	178	212,4	213	2	1	–	56
160	196,8	–	209,2	2,1	1,1	171	–	234	2	1	192	94
	196,8	–	209,2	2,1	1,1	171	–	234	2	1	192	94
	196,8	–	209,2	2,1	1,1	171	–	234	2	1	192	94
	196,8	–	209,2	2,1	1,1	171	–	234	2	1	192	94
	207	48	203,7	2,1	1	190	226	227	2	1	–	67
170	211,3	–	225,6	2,1	1,1	181	–	254	2	1	205	126
	211,3	–	225,6	2,1	1,1	181	–	254	2	1	205	126
	211,3	–	225,6	2,1	1,1	181	–	254	2	1	205	126
	211,3	–	225,6	2,1	1,1	181	–	254	2	1	205	126
	223	54	219,3	2,1	1	204	244,9	246	2	1	–	90
	226,5	–	241,7	2,1	1,1	191	–	274	2	1	220	160
180	226,5	–	241,7	2,1	1,1	191	–	274	2	1	220	160
	226,5	–	241,7	2,1	1,1	191	–	274	2	1	220	160
	226,5	–	241,7	2,1	1,1	191	–	274	2	1	220	160
	239	60	234,8	2,1	1	214	262,6	264	2	1	–	117
190	249	60	244,8	2,1	1	224	272,6	274	2	1	–	122
200	264	66	259,9	2,1	1	236	291	292	2	1	–	157

[1] For calculating the initial grease fill → **page 317**.


Super-precision bearing
SKF